Linear · GV Series Red 620nm

lumher

USER MANUAL

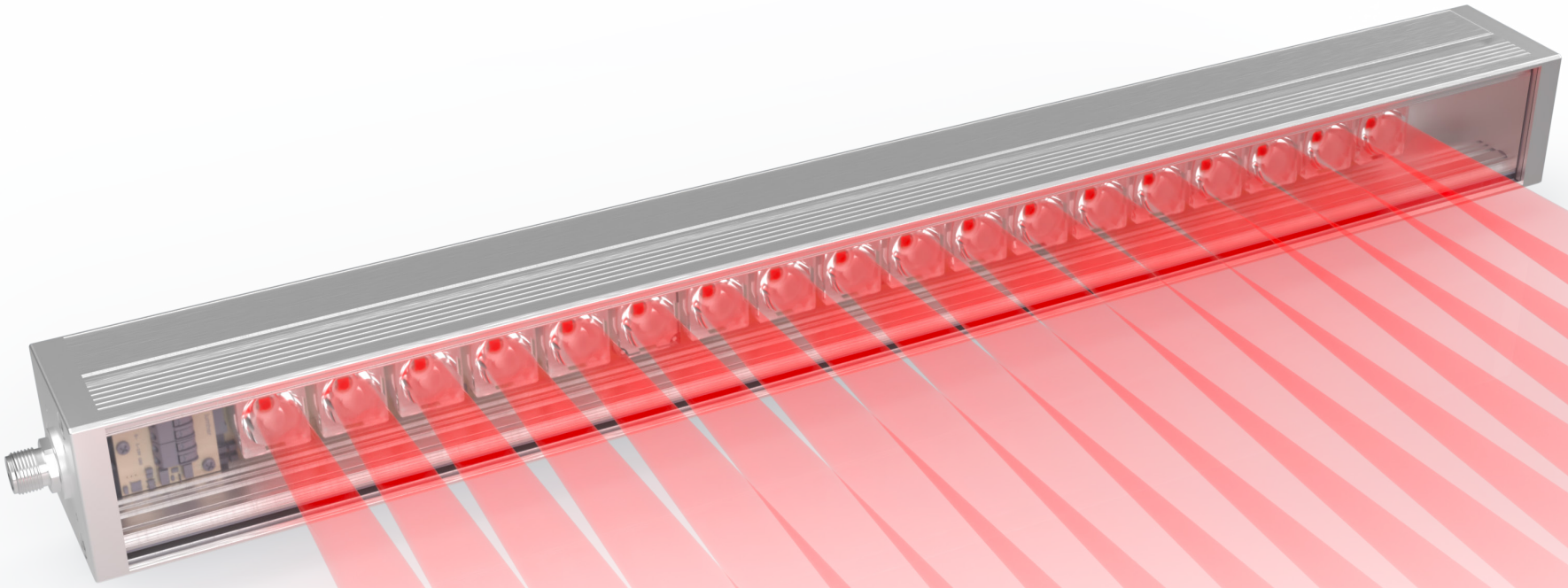

24 V
DC

CONTINUOUS
STROBE
DIMMABLE

150mm
INCREMENTAL

M12A
M12T
M12T+M12A

OPTICS

CONTINUOUS 1x
STROBE 2x

INTEGRATED
CONTROLLER

IP65

36
MONTHS

EU
MADE IN SPAIN

1. Product Description

LED luminaire suitable for installation in electrical panels, machinery, home, elevators, machine vision, etc.

Structure made of silver anodized aluminum with multiple options. Equipped with the latest generation LEDs, the internal electronics allow direct connection to a power source, thus extending the life of the luminaire. In vision luminaires, a protection system is included to avoid exceeding the recommended triggering time.

2. Safety Tips

LUMHER luminaires have been manufactured according to the technical specifications specified for each model, using high-quality components and following a delicate production process.
Each production detail has been carefully crafted, from the manufacture of the electronic circuit to the final packaging, maintaining all quality criteria.
Users should consider the following safety tips regarding the product.

- This manual should be kept close to the luminaire.
- It is important that users read all instructions before connecting the luminaire.
- Follow the instructions in this document.
- Install the product taking into account the safety risks specified in this document.
- LUMHER is not responsible for improper use of this luminaire.

2.1. Correct Use of the Luminaire

The product classification is IP40 or IP65 depending on the selected model, so this information must be considered when using the luminaire.

2.2. Product Safety

If the luminaire is not used correctly, it may be harmful to individuals due to electrical risks.

- The connection should ONLY be made by qualified personnel.
- Disconnect the power before performing any manipulation of the luminaire.
- The luminaire must comply with all the requirements indicated on the product label.
- Maintenance and repair should be carried out only by qualified personnel.
- There may be a risk of explosion if the luminaire is used in explosive environments.
- Do not install the luminaire in explosive environments.

Installation and Safety

- Avoid hitting the luminaire, even with packaging. It is a fragile product. Strong impacts may damage the luminaire.
- Use only the fastenings provided by the manufacturer.
- Properly use the mounting fixings.
- The luminaire must be securely fastened with the appropriate screws depending on the installation surface.
- Periodically check that the luminaire is properly installed.

Glare Hazard

- Avoid looking directly at the luminaire, as it may cause temporary vision problems, irritation, and eye pain.
- Do not look directly at the light source.
- Adjust the luminaire so that the light source does not directly impact the operator's eyes.

Hazard from Non-Original Spare Parts

- Always use original spare parts from the manufacturer.

Damage Due to High Temperatures

Install the luminaire in environments where there is no high temperature. A temperature above the maximum operating range can drastically reduce the luminaire's lifespan. Avoid direct sunlight.

Damage Due to Repairs

Do not disassemble or repair the equipment if not done by qualified personnel. Improper repairs may cause damage to people and objects.
In case of failure, do not repair; return to technical support.
Any modification of the product not performed by the technical service will void the warranty.

2.2. Risk Levels

DANGER: Risk in case of non-compliance. It may cause immediate injury or even death.
WARNING: Risk in case of non-compliance. It may cause injuries or even death.
ATTENTION: Risk in case of non-compliance. It may cause immediate injuries.
ADVICE: Risk in case of non-compliance. It may cause damage to objects.

3. Versions

The product code can be found on the luminaire label and packaging. Find the luminaire code on the packaging label and verify the item with the product label.
The barcode on the label shows the week and year of manufacture.
Do not remove the product label, as it will facilitate traceability in case of return due to failure or malfunction.
If the luminaire does not have a label, it will lose its warranty.

lumher

4. Technical specifications

Power supply voltage	24 Vdc ±5%	
Trigger input	24 Vdc PNP / NPN	
Max. on time	Continuous = unlimited	Strobe = 250 ms
Max. working cycle	Continuous = 1	Strobe = 1/3
Max. consumption Trigger input	1,5 mA	
Max. number of cascadable modules	This luminaire is not cascadable	
Wavelength	Red	620nm
Beam angle	Transparent Semidiffuse	6° · 15° · 30° 72°
Electrical protections	Transient overvoltages Polarity reversal Current sabilizer	YES YES YES
IP Rating	IP65	
Protection type	Class III	
Operating temperature	-10 °C to +40 °C	
Storage temperature	0°C to +60 °C	
Max. relative humidity	80% (without condensation)	
Body material	Anodized aluminum	
Side cover material	Anodized aluminum	
Diffuser material	Polycarbonate / Methacrylate	
Lenses material	Methacrylate	
Connection types	M12A, M12T, cable M12T with connector + M12A	
Standards	RoHs, CE	

5. Connection

Input	Continuous	Continuous - Trigger	Continuous - Strobe
Pin 1	+24 Vdc	+24 Vdc	+24 Vdc
Pin 2	Not connected	Trigger NPN	Trigger NPN
Pin 3	0 Vdc	0 Vdc	0 Vdc
Pin 4	Not connected	Trigger PNP	Trigger PNP

Input	Continuous - Strobe - Dimmable	
	M12T Input	M12A Input
Pin 1	+24 Vdc	A+
Pin 2	Trigger NPN	B-
Pin 3	0 Vdc	1-10V
Pin 4	Trigger PNP	GND

M12T Male

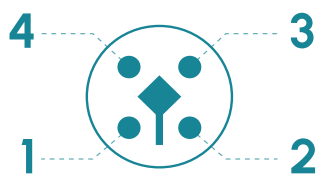

M12A Male

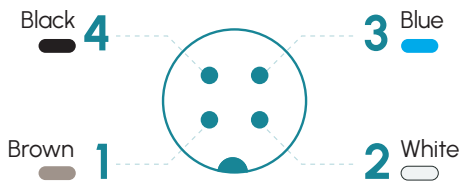

Fixings

G00R1

GV · 620nm

lumher

6. Measures

IP65

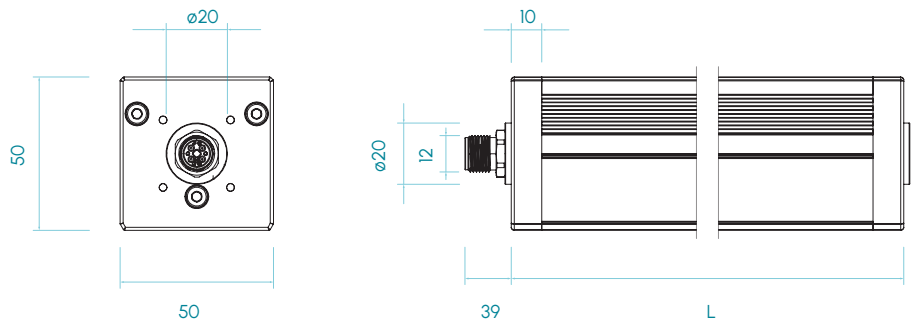

7. Selection guide

GV R 5

Input
- Y - M12A connector
- T - M12T connector
- PTY - Cable with M12T connector + M12A

Diffuser
- Q - Transparent 6°
- V - Transparent 15°
- S - Transparent 30°
- C - Semidiffuse

Working mode
- P - Continuous
- N - Continuous - Trigger
- Z - Continuous - Strobe
- W - Continuous - Strobe Dimmable

Length
- 1 - 9 - 150mm steps

Measures in mm

GV · 620nm

lumher

Model GV · Red 620nm

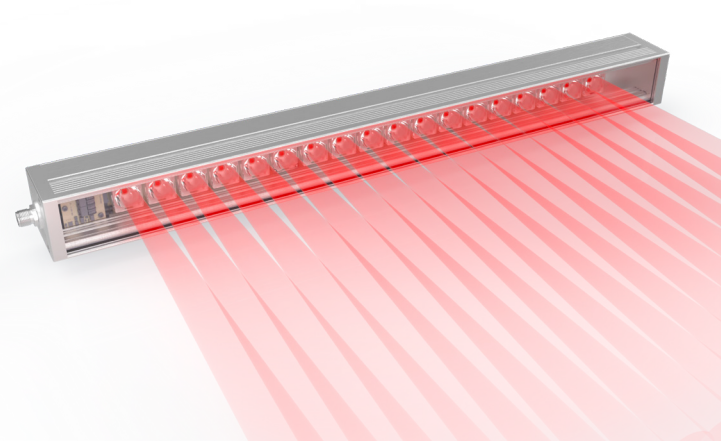

620nm
RED

TRANSPARENT
6°, 15°, 30°

SEMIDIFFUSE

PHOTOBIOLOGICAL RISK
RG1 - LOW

60.000h
LIFESPAN

Table of characteristics

	Length L (mm)	Weight (g)	Luminous flux [2] (lm) CONT.	Luminous flux [2] (lm) STROBE	Power consumed (W) CONT.	Power consumed (W) STROBE
GV 01 ...	250	741	661	1.157	11,8	26,9
GV 02 ...	400	1.063	1.322	2.313	23,6	53,8
GV 03 ...	550	1.411	1.982	3.470	35,4	80,7
GV 04 ...	700	1.760	2.643	4.627	47,2	107,6
GV 05 ...	850	2.109	3.304	5.784	59	134,5
GV 06 ...	1.000	2.457	3.965	6.940	70,8	161,4
GV 07 ...	1.150	2.806	4.626	8.097	82,6	188,3
GV 08 ...	1.300	3.155	5.286	9.254	94,4	215,2
GV 09 ...	1.450	3.503	5.947	10.410	106,2	242,1

A	M12A
T	M12T

(2) The luminous flux (lm) is before the lenses.

lumher

8. Control

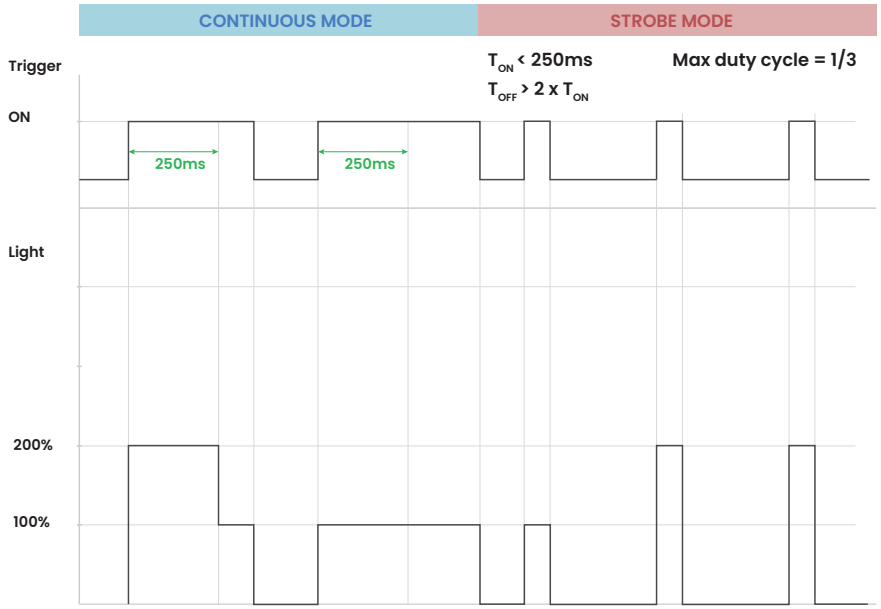

- For operation in Strobe mode, it is recommended that the power supply be rated at twice the power consumed by the luminaire in this mode.
- Keep the input voltage within the permissible range. An incorrect voltage may damage the LED driver.
- Permissible voltage range: 24 VDC ±5%.
- Incorrect wiring may cause damage to the luminaire, property damage and personal injury. The electrical connection must be carried out by qualified personnel. Strictly follow the instructions provided in the wiring section to ensure correct polarity.
- For luminaires equipped with control electronics, 1-10 V dimming is enabled by default. This control is not passive; an active controller capable of generating the required voltage is needed.
- RS485 communication is configured by default as 9600-8N1 with ID 1. The Modbus addressing sheet contains all the data accessible via Modbus RTU.

9. ModBus Addressing

COILS (Read / Write)

Name	Address	Value (1 True, 0 False)
Modbus dimming	0	0 / 1
1-10 V dimming	1	0 / 1
Light on	2	0 / 1

DISCRETE inputs (Read)

Name	Address	Value (1 True, 0 False)
Strobe ON	0	0 / 1

HOLDING registers (Read / Write)

Name	Address	Value
Modbus ID	0	1 to 255 (1 by default)
*Baud rate	1	0
**Parity	2	0
Global power	3	0 to 100
Sector 1 power	4	0 to 100
Sector 2 power	5	0 to 100
Sector 3 power	6	0 to 100
Sector 4 power	7	0 to 100
Sector 5 power	8	0 to 100
Sector 6 power	9	0 to 100
Sector 7 power	10	0 to 100
Sector 8 power	11	0 to 100
Sector 9 power	12	0 to 100

*Baud rate	Baud
0	9600
1	19200
2	115200

**Parity	Value
0	None
1	Odd
2	Even

Default values:

› 9600-8N1
› ID = 1
› 1-10V dimming enabled

lumher

INPUT registers (Read)		
Name	Address	Value
Manufacturing date (year/week)	0	YYWW
Serial number	1	0 to 65535
Firmware version	2	1
Number of sectors	3	0 to 9
1-10 V dimming	4	10 / 100
Trigger counter << 48	5	0 to 65535
Trigger counter << 32	6	0 to 65535
Trigger counter << 16	7	0 to 65535
Trigger counter << 00	8	0 to 65535
Minimum trigger duration (Base)	9	0 to 65535
Minimum trigger duration (Exp)	10	0 to 65535
Average trigger duration (Base)	11	0 to 65535
Average trigger duration (Exp)	12	0 to 65535
Maximum trigger duration (Base)	13	0 to 65535
Maximum trigger duration (Exp)	14	0 to 65535
Last trigger duration (Base)	15	0 to 65535
Last trigger duration (Exp)	16	0 to 65535
Minimum trigger cycle time	17	0 to 65535
Average trigger cycle time	18	0 to 65535
Maximum trigger cycle time	19	0 to 65535
Last trigger cycle time	20	0 to 65535
Minimum temperature	21	-
Average temperature	22	-
Maximum temperature	23	-
Last temperature reading	24	-
Sector 1 temperature	25	-
Sector 2 temperature	26	-
Sector 3 temperature	27	-
Sector 4 temperature	28	-
Sector 5 temperature	29	-
Sector 6 temperature	30	-
Sector 7 temperature	31	-
Sector 8 temperature	32	-
Sector 9 temperature	33	-

Time is expressed in microseconds. The duration fields can be calculated using the following expression:

$$Duration = Base \times 10^{Exp}$$

Temperature is expressed in Celsius degrees to one decimal place:

$$Temperature\ °C = \frac{Value}{10}$$

10. Switching On and Off

- The luminaire does not feature automatic switching. This function is only available on models equipped with control electronics.
- When voltage is applied, the luminaire switches on gradually and switches off when the voltage is removed. If equipped with control electronics, it will perform a gradual switch-on/switch-off sequence when voltage is applied and then remain on standby until it receives a trigger signal or switch-on command.
- The luminaire does not support dimming. Only models equipped with control electronics support 1-10 V or Modbus dimming.

11. Troubleshooting

If the lamp does not turn on:

- Check that the lamp is correctly connected to the power source.
- Verify that the polarity of the connection pins is correct.

If the lamp is defective, contact:
CONTAVAL S.L.U. (Lumher Technical Support)
Telf. +34 963 843 700
Email: service@lumher.es

lumher

12. Replacing the Light Source

The light source is adhered to the profile using thermal adhesive glue.
Thanks to the long lifespan of the LED, around 60,000 hours*, light source replacement will not be necessary if used as indicated in this manual.
In case the light source needs to be replaced, contact the technical department.

** Value for white LED*

13. Product Maintenance and Cleaning

WARNING - **Disconnect power before performing any maintenance tasks.**
This product does not require special maintenance.

- Cleaning tasks should only be carried out after turning off the lamp and once the surfaces have cooled down.
- Then proceed to clean the lamp with a non-abrasive liquid and a soft cloth.
- Regularly check that the four mounting screws are properly tightened.

ADVICE - **Liquid leaks can damage the lamp.**

14. Repair and Warranty

During the product's lifespan, the warranty covers product analysis and repair exclusively by Lumher's technical department or an authorized distributor, including the following points:

- Custody of the material provided for repair
- Cost of components, including labor dedicated to the defective product

The warranty does not cover:

- Transportation, packaging, and shipping costs
- Deterioration or damage caused by:
  - Installation and/or operation different from what is described in this manual
  - Repairs or repair attempts by personnel not authorized by Lumher
  - Operation of the equipment in environmental conditions other than those specified in the luminaire's technical sheet
  - Damage caused by liquid leaks in the lamp
  - Damage during transportation due to not following proper indications or inadequate packaging (original packaging is recommended)

WARRANTY PERIOD: The warranty period is 36 months from the date of purchase. Once this period has expired, repair services will be provided at the cost of replacement parts and labor according to established rates.

15. Recycling

Disposal of Obsolete Electrical and Electronic Devices (Directive 2002/96/EC-WEEE):
The crossed-out trash bin symbol indicates that this product, as it contains electrical and electronic components, should not be mixed with untreated municipal waste. For more detailed information regarding the recycling of this product, check your country's waste disposal regulations. Do not dispose of this product as solid waste, even if it contains such components. Reuse or proper recycling of electrical or electronic equipment (EEE) is important to protect the environment and human health.
According to the European WEEE Directive 2002/96/EC, these types of products should be disposed of in electrical and electronic waste disposal areas. The equipment may be disposed of by the distributor when purchasing an equivalent. Public administrations and manufacturers of electrical and electronic equipment are involved in facilitating all processes for the reuse and recovery of discarded electrical and electronic equipment through collection campaigns using appropriate planning mechanisms.
Incorrect disposal of electrical or electronic waste may be punishable by law according to the sanctions established by each country.

16. Symbology

CE	CE Logo
III	CLASS III DEVICE Device that works with extra-low voltages.
IP65	IP Rating
LED TEC	LED Technology
	Directive 2002/96/EC of the European Parliament and of the Council of 27 January 2003 on the disposal of Waste Electrical and Electronic Equipment (WEEE) (OJ L 37, 13.2.2003, p. 1).

lumher